# Cut the cord
## Elevate your endoscopic efficiency

lazurite®

# ArthroFree®
## The Cordless Endoscopic Camera for ENT

With ArthroFree, cords and bulky light and power boxes are a thing of the past. Experience a new world of flexibility, not only with more freedom of movement, but the ability to expand your endoscopic setup.

### Uninterrupted focus on what truly matters - patients

- **Simple -** Eliminate camera-cable management & interruptions
- **Clear -** Delivers a crystal clear, crisp surgical image
- **Focus -** Fix your eyes on the screen— and keep them there

### Refined workflow, refined efficiency

- **Quick setup -** Attach your scope, insert the battery, and begin your procedure
- **Increased patient comfort -** No draped cables over your patients allows for an unobstructed, more relaxed, experience
- **Compatibility -** Designed to integrate seamlessly with both rigid and flexible scopes

SCHEDULE A DEMO **TODAY**
www.lazurite.co
1.833.214.2324
sales@lazurite.co

Lazurite Inc.
4760 Richmond Rd., Ste 400, Cleveland, OH 44128 | 1.833.214.2324
lazurite.co | © 2025 Lazurite Inc. All rights reserved

25-015D/20252.0

# ArthroFree®
## Endoscopy Tower Kit

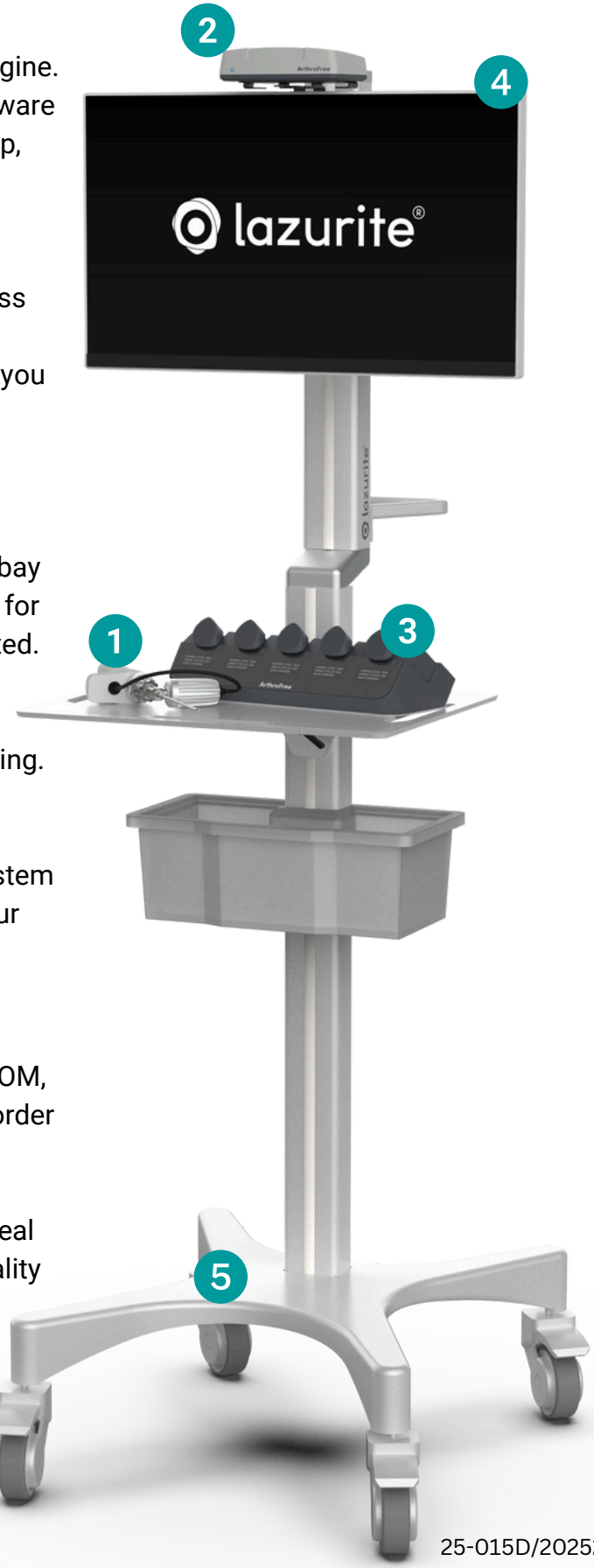


**1 ArthroFree Wireless Camera Head**
1080p HD camera with a Meridiem® Light Engine. Paired with optimized image processing firmware and white balance algorithm, it ensures a crisp, clear surgical image.

**2 Wireless Receiver**
Uses encrypted ultra-wide band (UWB) wireless connection, avoiding reliance on customer IT systems. With 100ms video latency at 30fps, you can expect smooth and precise real-time visualization.

**3 Charger and Batteries**
Each battery delivers 60 min of power. The 5-bay charger ensures your camera is always ready for use, keeping your busy clinic days uninterrupted.

**4 8MP Clinical Review Display Monitor**
27-inch 4K 8MP IPS display with 178° of viewing.

**5 Tryten Tower**
Mobile cart option that allows the camera system to travel between exam rooms, optimizing your clinical workflow.

**MTR133 Recorder**
Next generation DICOM, AI and 4K ready recorder with automated workflow. It's 13.3" touchscreen is an ideal solution for high-quality video capture for comprehensive documentation.

Lazurite Inc.
4760 Richmond Rd., Ste 400, Cleveland, OH 44128 | 1.833.214.2324
lazurite.co | © 2025 Lazurite Inc. All rights reserved

25-015D/20252.0